TOX®-Powerpackage line-X type X-S / X-K
Optimum controllability and adjustability

NEW

Data sheet 10.30

2014/08

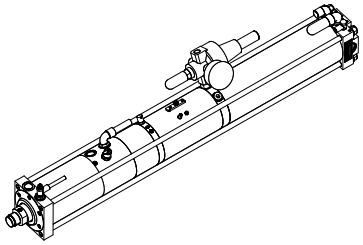

Type X-S (standard)
2 bar – 6 bar

up to 1727 kN press force
up to 100 mm total stroke
up to 22 mm power stroke

The line-X drives offer the known advantages of the pneumohydraulic TOX®-Powerpackage drives which have proven their quality in applications all over the world. Additionally they are captivating due to their outstanding controllability and adjustability, improved sealings and a high range of model variants.

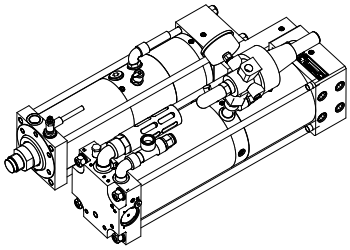

Type X-K (compact)
2 bar – 6 bar

up to 1672 kN press force
up to 400 mm total stroke
up to 69 mm power stroke

The TOX®-Powerpackages X-S and X-K are offered with two pneumatical control types:

With pneumatic spring LF
By default, the drives are equipped with pneumatic spring and power stroke valve which allows high stroke frequencies. Three pneumatic connections are required for forward stroke, return stroke and constant supply for the pneumatic spring.

With valve block ZVX
As an option, the drives are equipped with the valve block ZVX. Beside a maximum approach force and high stroke frequencies, it allows longest maintenance intervals. Two pneumatic connections are required for forward stroke and return stroke (details see page 3).

All drives are provided with dynamic pressure switch (control throttle X). Optional control variants such as pressure regulation in the power stroke line, external switch-on of the power stroke or external power stroke release are possible (see TOX®-Data sheet 10.16).

Standard equipment for all TOX®-Powerpackages line-X:
Patented power bypass ZLB and hydraulic end position damping ZHD.

Further advantages:
+ Venting in 3 main mounting positions (vertical down and up, horizontal)
+ Prepared for stroke monitoring ZHU up to design size 030
+ Prepared for external linear position sensor ZHW up to design size 030
+ Fixed stop with elastomer cushioning
+ Type X-K with patented circular buffer design for shorter overall length

Twelve features which make the difference:

1 **Simple:** Actuation similar to a double acting pneumatic cylinder

2 **Fast:** Pneumatic approach stroke, high stroke frequency

3 **Safe production:** Available oil pressure monitoring eliminates potential production defects in case of a loss or drop in air pressure

4 **Low maintenance:** Oil refill connection, low oil level indicator (optional electric output)

5 **Wear resistant:** Pneumatic return stroke of intensifier piston. Oil reservoir is pneumatically preloaded

6 **Cost saving:** Air consumption considerably lower than comparable systems

7 **Strong:** Generation of the power stroke by internal air / oil intensifier

8 **Universal:** Unlimited application possibilities

9 **Smooth:** Soft touch on approach, hydraulic cushion on retract

10 **Double-bearing:** Best possible guidance of the working rod

11 **Silent:** Operated by compressed air only, no additional power sources

12 **Controllable:** A pneumatic spring allows individual adaptation to the working process

Functioning of the TOX®-Powerpackage with pneumatic spring

Functioning of the TOX®-Powerpackage

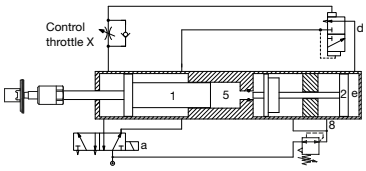

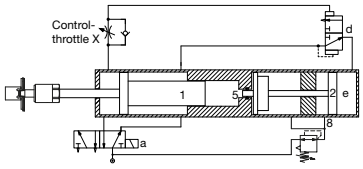

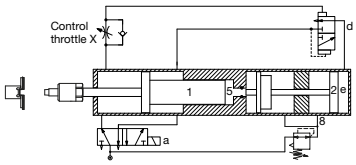

Fast approach – the main control valve (a) is switched. The working piston (1) extends, initially with a fast approach stroke, until it meets resistance at any point. It stopps and the integrated power stroke valve (d) is shifted.

Power stroke – the intensifier piston (2) closes the high pressure chamber and compresses the oil in the working area (5) up to 400 bar. This oil pressure applies pressure to the back of the working piston (1) and triggers the power stroke.

Return stroke – after the changeover of the main control valve (a) the power stroke valve (d) automatically vents the chamber (e). The working piston (1) and the intensifier piston (2) return to their initial position.

TOX®-Powerpackage with pneumatic spring LF
In case of a TOX®-Powerpackage with pneumatic spring, the oil pretension is effected by compressed air applied to the piston surface in the intensifier chamber. The air pressure is set with a pressure regulator (set at the factory to a pressure of 0.8 bar). Also, air is connected to connector (8) of the pneumatic spring pressure regulator (minimum pressure 2.5 bar). This pressurizes the oil reservoir to assist the oil flow during approach stroke and allows the cylinder to operate in any mounting orientation. In addition, the air pressure is used to retract the intensifier piston during the return stroke.

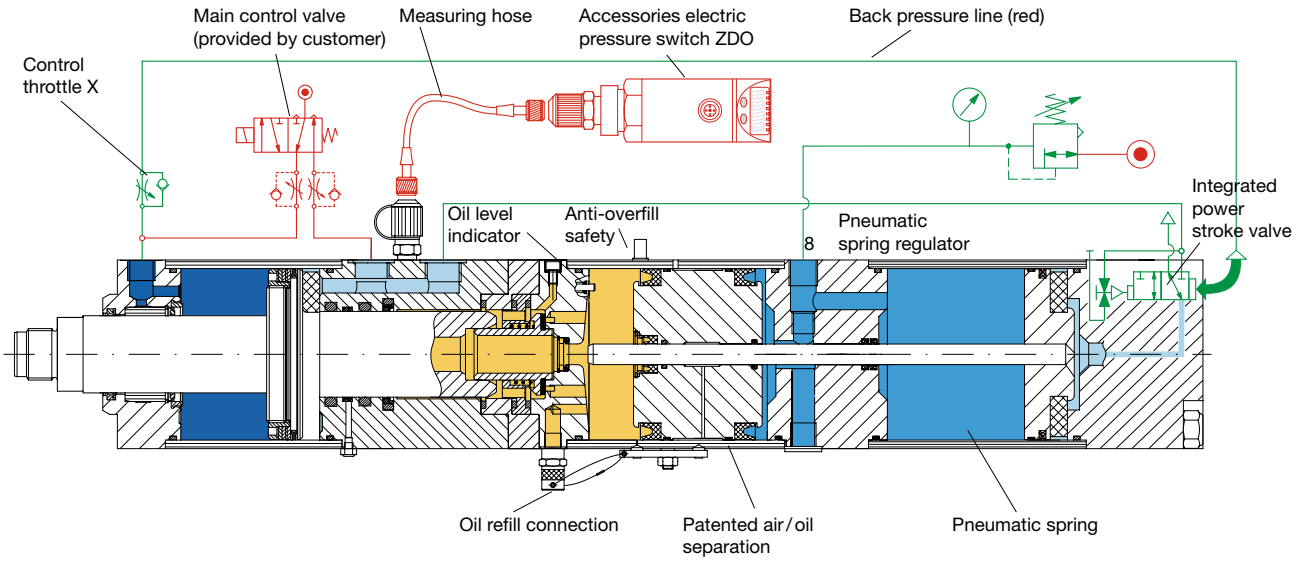

Patented air / oil separation:
The prerequisite for trouble-free operation over a long time. A groove vented to the atmosphere prevents the air from mixing with the oil.

In the model shown above, the **power stroke valve** is integrated in the drive. These models are marked correspondingly in column *IV of the following tables.

By mounting of **optional control components** e. g. pressure regulation in the power stroke line ZDK, an individual control of the cylinder e. g. for pressing-in operations is possible.

Accessory valve block ZVX
Increased power for the TOX®-Powerpackage line X

Increased performance / your benefits:
+ The pneumatically optimised design allows maximum stroke frequencies.
+ Due to the pneumatic support for the fast approach stroke, the maximum fast approach force can be used.
+ The sophisticated sealings provide a maximum maintenance interval.
+ Only two pneumatic connections are required for forward stroke and return stroke due to integrated pneumatic spring in valve block ZVX.

All pneumatic control components, e. g. power stroke valve, pneumatic spring, support for the fast approach stroke, a rapid vent valve, control throttle X and pneumatic spring display are integrated in the valve block ZVX.
The valve block ZVX can be mounted on various sides of the TOX®-Powerpackage. By default, it is mounted on the main connection side.

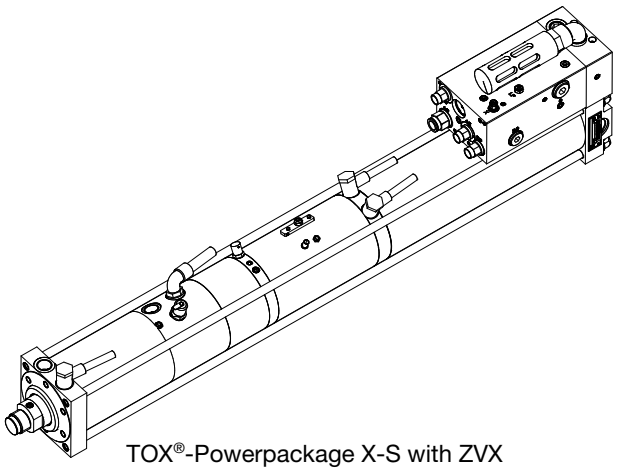

TOX®-Powerpackage X-S with ZVX

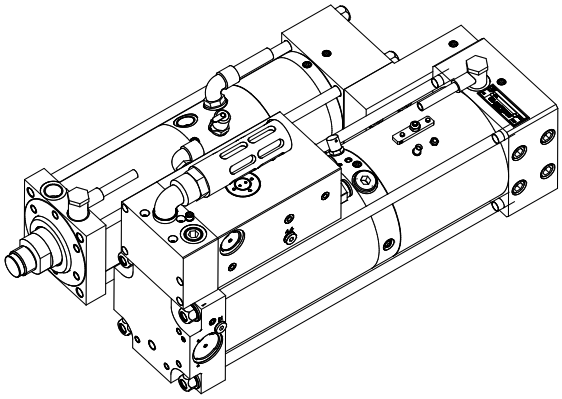

TOX®-Powerpackage X-K with ZVX

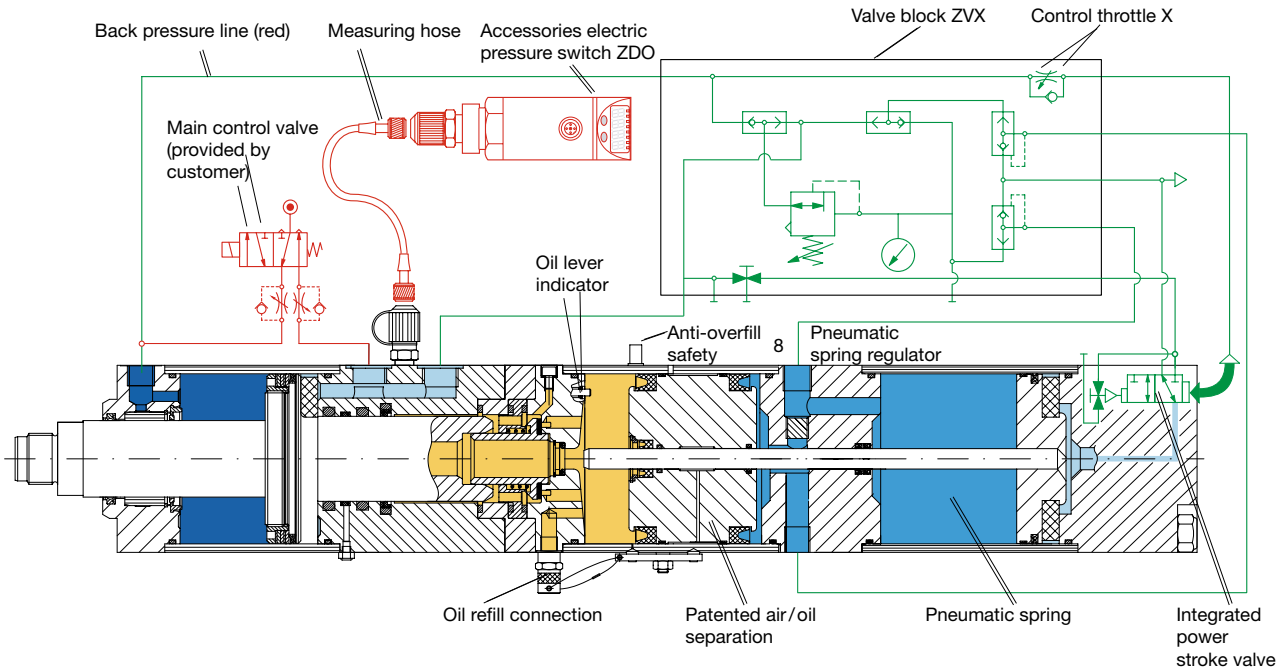

TOX®-Powerpackage line-X
Type X-S

Type X-S with pneumatic spring LF

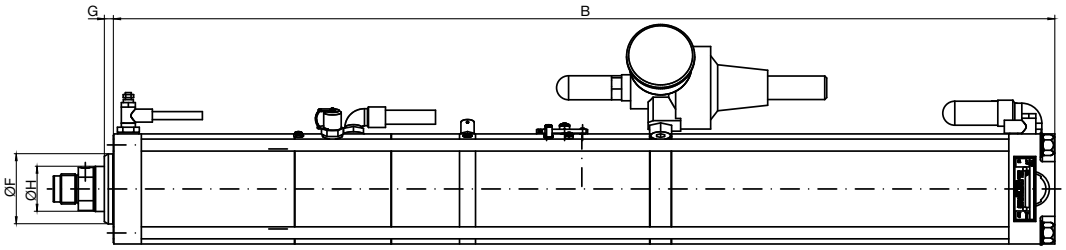

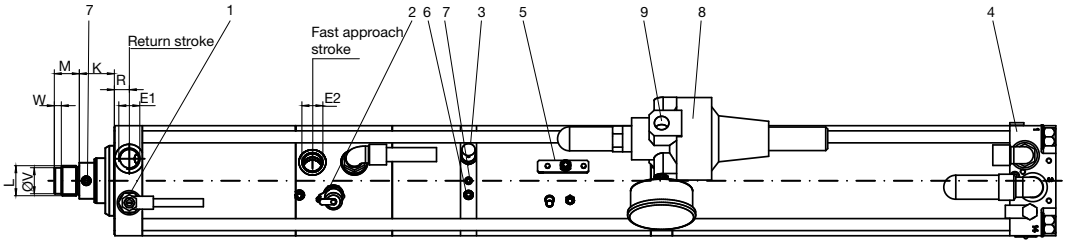

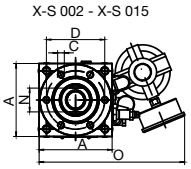

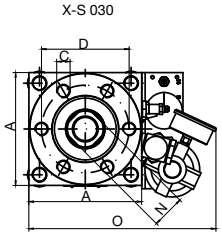

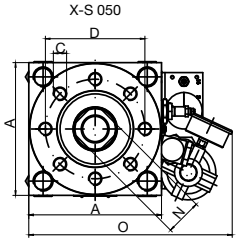

1 Control throttle X
2 High-pressure measuring hose
3 Oil filling nipple
4 Change over valve fast approach stroke / power stroke
5 Bleed plate
6 Oil level indicator
7 Bleed screw
8 Pneumatic spring LF
9 Pneumatic spring connection (permanent pressure)
10 Valve block ZVX

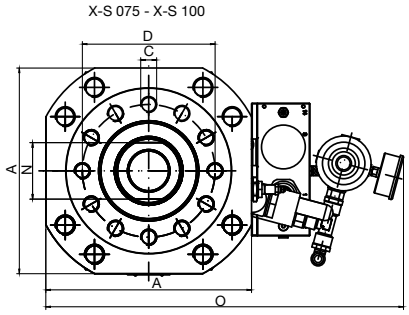

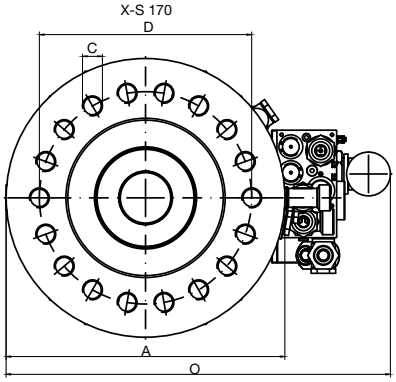

Type X-S with valve block ZVX

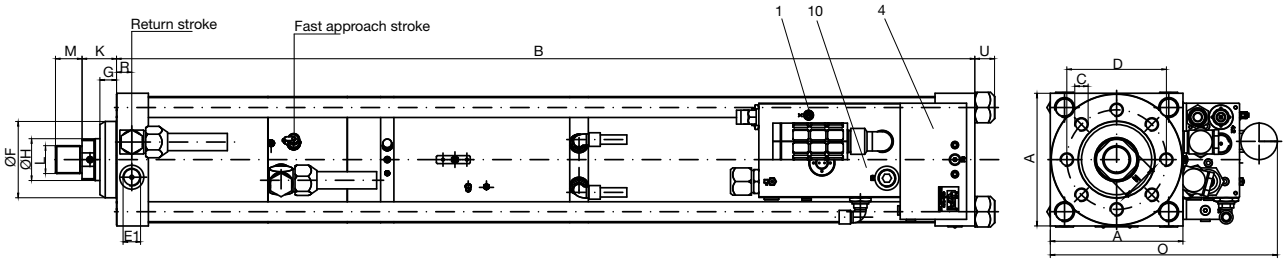

Not what you are looking for? Just call or e-mail us - we also supply special versions!

TOX®-Powerpackage line-X
Type X-S

Order numbers for TOX®-Powerpackages with pneumatic spring LF

Order no. Type	total stroke	incl. power stroke	max. press force at comp. air 6 bar kN	fast appr. with LF at comp. air 6 bar daN	retracting force at comp. air 6 bar daN	A	B	C	D	pneumatic connection E_1	pneumatic connection E_2	F_{f7}	G	H	K	L	M	N	O	R	U	V_{g6}	W	*IV
X-S 001.030.100.22LF			10.9	144	146	70	738	6xM8x12	54	G 3/8“	G 1/4“	40	9	20	26	M16x1.5	15	17	175	13	-	-	-	X
X-S 002.030.100.12LF			16.9	144	146	70	738	6xM8x12	54	G 3/8“	G 1/4“	40	9	20	26	M16x1.5	15	17	175	13	-	-	-	X
X-S 004.030.100.12LF			36.2	178	187	85	821	6xM8x15	64	G 3/8“	G 3/8“	50	10	30	28.5	M22x2	20	24	190	14	-	18	7	X
X-S 008.030.100.12LF			70.9	329	318	110	941	6xM10x16	88	G 1/2“	G 1/2“	70	9	45	35	M30x2	25	36	233	15		26	7	X
X-S 015.030.100.12LF			119.2	477	518	135	978	6xM16x25	100	G 1/2“	G 1/2“	75	15	50	36	M30x2	25	41	258	17.5		26	7	X
X-S 030.030.100.12LF			264.2	708	874	170	1188	6xM20x30	132	G 3/4“	G 3/4“	100	17	56	47	M39x2	35	50	312	20	22	-	-	-
X-S 050.030.100.08LF			490.6	785	1083	200	1294	8xM20x30	150	G 1“	G 1“	115	25	63	52	M42x2	40	55	342	23	30	-	-	-
X-S 075.030.100.12LF			806.7	1429	1972	310	1417	12xM24x40	200	G 1“	G 1“	150	20	100	60	M64x2	60	85	452	40	30	-	-	-
X-S 100.030.100.08LF			1030.6	1429	1972	310	1417	12xM24x40	200	G 1“	G 1“	150	20	100	60	M64x2	60	85	452	40	30	-	-	-
X-S 170.030.100.06			1727.5	-	2447	420	1562	18xM30x55	320	G 1“	G 1“	240	35	150	70	M80x2	80	4xØ16	593.5	99	30	-	-	-

*IV = Integrated valve

Notes

- Identical external dimensions and distance between holes for X-S 001 and X-S 002. Must be observed when mounting the tension rod for stroke monitoring ZHU and the external linear position sensor ZHW!
- All types up to X-S 030 are prepared for stroke monitoring ZHU and external linear position sensor ZHW.

Order numbers for TOX®-Powerpackages with valve block ZVX

The control variant with valve block ZVX allows a higher force by using the support for fast approach stroke.

Order no.	Valve block	Fast appr. force with ZVX at 6 bar daN
X-S 001.030.100.22	ZVX 038	170
X-S 002.030.100 12	ZVX 038	170
X-S 004.030.100 12	ZVX 038	243
X-S 008.030.100.12	ZVX 012	432
X-S 015.030.100.12	ZVX 012	678
X-S 030.030.100.12	ZVX 034	1117
X-S 050.030.100.08	ZVX 001	1423
X-S 075.030.100.12	ZVX 001	2752
X-S 100.030.100.08	ZVX 001	2752
X-S 170.030.100.06	ZVX 001	3983

Description for ordering the TOX®-Powerpackage line-X

X-S 001.030.100.22 LF

- Version with pneumatic spring (without designation = valve block ZVX)
- Power stroke (mm)
- Total stroke (mm)
- can be used up to 6 bar
- Press force category (t)
- Type

TOX®-Powerpackage line-X
Type X-K

Type X-K with pneumatic spring LF

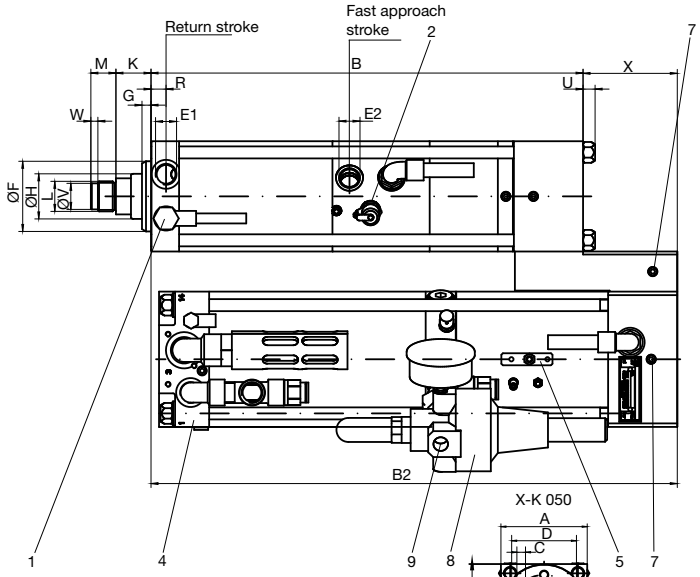

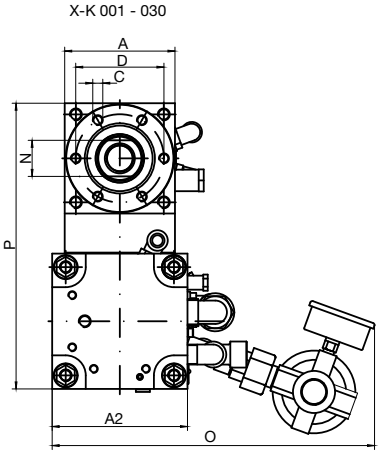

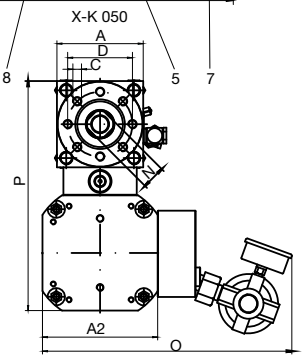

1 Control throttle X
2 High-pressure measuring hose
3 Oil filling nipple
4 Change over valve fast approach stroke/power stroke
5 Bleed plate
6 Oil level indicator
7 Bleed screw
8 Pneumatic spring LF
9 Pneumatic spring connection (permanent pressure)
10 Valve block ZVX
11 Working part
12 Intensifier

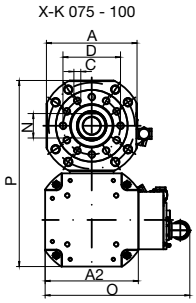

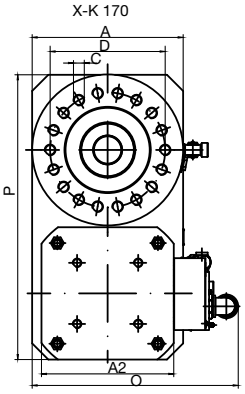

Type X-K with valve block ZVX

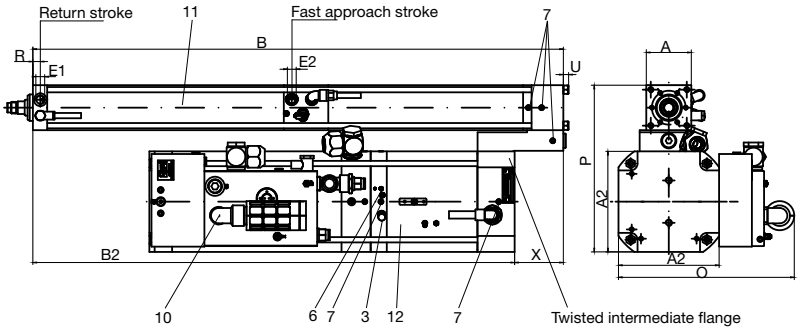

Order numbers for X-K with valve block ZVX

Order no. Type	total stroke	incl. power stroke	valve block	Fast appr. force with ZVX at 6 bar comp. air daN
X-K 001.030.	100.	30	ZVX 012	170
X-K 001.030.	200.	28	ZVX 012	170
X-K 001.030.	300.	26	ZVX 012	170
X-K 002.030.	100.	19	ZVX 012	170
X-K 002.030.	200.	17	ZVX 012	170
X-K 002.030.	200.	39	ZVX 012	170
X-K 002.030.	200.	34	ZVX 012	170
X-K 002.030.	200.	68	ZVX 012	170
X-K 002.030.	300.	14	ZVX 012	170
X-K 002.030.	300.	37	ZVX 012	170
X-K 002.030.	300.	31	ZVX 012	170
X-K 002.030.	300.	65	ZVX 012	170
X-K 004.030.	100.	06	ZVX 012	243
X-K 004.030.	100.	12	ZVX 012	243
X-K 004.030.	200.	12	ZVX 012	243
X-K 004.030.	200.	22	ZVX 012	243
X-K 004.030.	200.	49	ZVX 034	243
X-K 004.030.	400.	24	ZVX 012	243
X-K 004.030.	400.	45	ZVX 034	243
X-K 004.030.	400.	44	ZVX 034	243
X-K 008.030.	100.	06	ZVX 012	432
X-K 008.030.	200.	12	ZVX 012	432
X-K 008.030.	200.	29	ZVX 034	432
X-K 008.030.	200.	69	ZVX 001	432
X-K 008.030.	400.	24	ZVX 034	432
X-K 008.030.	400.	65	ZVX 001	432
X-K 015.030.	200.	12	ZVX 034	678
X-K 015.030.	200.	32	ZVX 001	678
X-K 015.030.	200.	64	ZVX 001	678
X-K 015.030.	400.	27	ZVX 001	678
X-K 015.030.	400.	61	ZVX 001	678
X-K 030.030.	200.	12	ZVX 001	1117
X-K 030.030.	200.	27	ZVX 001	1117
X-K 030.030.	400.	24	ZVX 001	1117
X-K 050.030.	200.	15	ZVX 001	1423
X-K 050.030.	400.	11	ZVX 001	1423
X-K 050.030.	400.	23	ZVX 001	1423
X-K 075.030.	300.	21	ZVX 001	2752
X-K 100.030.	300.	10	ZVX 001	2752
X-K 170.030.	200.	10	ZVX 001	3983

TOX®-Powerpackage line-X
Type X-K

Order no. Type	total stroke incl. power stroke	max. press force at comp. air 6 bar kN	fast appr. with LF at comp. air 6 bar daN	retracting force at comp. air 6 bar daN	A	A_2	B	B_2	C	D	pneumatic connection E_1	pneumatic connection E_2	F_{f7}	G	H	K	L	M	N	O	P	R	U	V_{g6}	W	X	*IV
X-K 001.030.	100. 30LF	14.3	144	146	70	110	377	511	6xM8x12	54	G1/4	G1/2	40	9	20	26	M16x1.5	15	17	233	220	13	8	–	–	134	X
X-K 001.030.	200. 28LF	14.3	144	146	70	110	577	522	6xM8x12	54	G1/4	G1/2	40	9	20	26	M16x1.5	15	17	233	220	13	8	–	–	55**	X
X-K 001.030.	300. 26LF	14.3	144	146	70	110	777	722	6xM8x12	54	G1/4	G1/2	40	9	20	26	M16x1.5	15	17	233	220	13	8	–	–	55**	X
X-K 002.030.	100. 19LF	18.7	144	146	70	110	377	511	6xM8x12	54	G1/4	G1/2	40	9	20	26	M16x1.5	15	17	233	220	13	8	–	–	134	X
X-K 002.030.	200. 17LF	18.7	144	146	70	110	577	522	6xM8x12	54	G1/4	G1/2	40	9	20	26	M16x1.5	15	17	233	220	13	8	–	–	55**	X
X-K 002.030.	200. 39LF	18.7	144	146	70	110	577	649	6xM8x12	54	G1/4	G1/2	40	9	20	26	M16x1.5	15	17	233	220	13	8	–	–	72	X
X-K 002.030.	200. 34LF	20.9	144	146	70	135	577	659	6xM8x12	54	G1/4	G1/2	40	9	20	26	M16x1.5	15	17	258	245	13	8	–	–	82	X
X-K 002.030.	200. 68LF	20.9	144	146	70	135	577	707.5	6xM8x12	54	G1/4	G1/2	40	9	20	26	M16x1.5	15	17	258	245	13	8	–	–	130.5	X
X-K 002.030.	300. 14LF	18.7	144	146	70	110	777	722	6xM8x12	54	G1/4	G1/2	40	9	20	26	M16x1.5	15	17	233	220	13	8	–	–	50**	X
X-K 002.030.	300. 37LF	18.7	144	146	70	110	777	722	6xM8x12	54	G1/4	G1/2	40	9	20	26	M16x1.5	15	17	233	220	13	8	–	–	55**	X
X-K 002.030.	300. 31LF	20.9	144	146	70	135	777	712	6xM8x12	54	G1/4	G1/2	40	9	20	26	M16x1.5	15	17	258	245	13	8	–	–	65**	X
X-K 002.030.	300. 65LF	20.9	144	146	70	135	777	713.5	6xM8x12	54	G1/4	G1/2	40	9	20	26	M16x1.5	15	17	258	245	13	8	–	–	63.5**	X
X-K 004.030.	100. 06LF	45.8	178	187	85	110	402	513	6xM8x15	64	G3/8	G1/2	50	10	30	28.5	M22x2	20	24	233	235	14	10	18	7	147	X
X-K 004.030.	100. 12LF	52.1	178	187	85	135	402	528	6xM8x15	64	G3/8	G1/2	50	10	30	28.5	M22x2	20	24	258	260	14	10	18	7	126	X
X-K 004.030.	200. 12LF	45.8	178	187	85	110	602	671	6xM8x15	64	G3/8	G1/2	50	10	30	28.5	M22x2	20	24	233	235	14	10	18	7	69	X
X-K 004.030.	200. 22LF	51.6	178	187	85	135	602	728	6xM8x15	64	G3/8	G1/2	50	10	30	28.5	M22x2	20	24	258	260	14	10	18	7	126	X
X-K 004.030.	200. 49LF	50.9	178	187	85	190	602	704	6xM8x15	64	G3/8	G3/4	50	10	30	28.5	M22x2	20	24	317	315	14	10	18	7	102	–
X-K 004.030.	400. 24LF	45.8	178	187	85	110	1031	967	6xM8x15	64	G3/8	G1/2	50	10	30	28.5	M22x2	20	24	233	235	14	10	18	7	64**	X
X-K 004.030.	400. 45LF	51.6	178	187	85	135	1002	1218	6xM8x15	64	G3/8	G1/2	50	10	30	28.5	M22x2	20	24	258	260	14	10	18	7	216	X
X-K 004.030.	400. 44LF	50.9	178	187	85	190	1002	910	6xM8x15	64	G3/8	G3/4	50	10	30	28.5	M22x2	20	24	317	315	14	10	18	7	92**	–
X-K 008.030.	100. 06LF	81.2	329	318	110	135	431	525	6xM10x16	88	G1/2	G1/2	70	9	45	35	M30x2	25	36	258	285	15	12	26	7	94	X
X-K 008.030.	200. 12LF	81.2	329	318	110	135	631	692	6xM10x16	88	G1/2	G1/2	70	9	45	35	M30x2	25	36	258	285	15	12	26	7	61	X
X-K 008.030.	200. 29LF	80.2	329	318	110	190	631	697	6xM10x16	88	G1/2	G3/4	70	9	45	35	M30x2	25	36	317	340	15	12	26	7	66	–
X-K 008.030.	200. 69LF	81.0	329	318	110	267	631	778	6xM10x16	88	G1/2	G1	70	9	45	35	M30x2	25	36	440	417	15	12	26	7	147	–
X-K 008.030.	400. 24LF	80.2	329	318	110	190	1031	1097	6xM10x16	88	G1/2	G3/4	70	9	45	35	M30x2	25	36	317	340	15	12	26	7	66	–
X-K 008.030.	400. 65LF	81.0	329	318	110	267	1031	904	6xM10x16	88	G1/2	G1	70	9	45	35	M30x2	25	36	440	417	15	12	26	7	127**	–
X-K 015.030.	200. 12LF	155.4	477	518	135	190	650	716.5	6xM16x25	100	G1/2	G3/4	75	15	50	36	M30x2	25	41	317	340	15	16	26	7	66.5	–
X-K 015.030.	200. 32LF	156.9	477	518	135	267	650	792.5	6xM16x25	100	G1/2	G1	75	15	50	36	M30x2	25	41	440	417	15	16	26	7	142.5	–
X-K 015.030.	200. 64LF	156.9	477	518	135	267	650	1189.5	6xM16x25	100	G1/2	G1	75	15	50	36	M30x2	25	41	440	417	15	16	26	7	539.5	–
X-K 015.030.	400. 27LF	156.9	477	518	135	267	1050	925.5	6xM16x25	100	G1/2	G1	75	15	50	36	M30x2	25	41	440	417	15	16	26	7	124.5**	–
X-K 015.030.	400. 61LF	156.9	477	518	135	267	1050	1192.5	6xM16x25	100	G1/2	G1	75	15	50	36	M30x2	25	41	440	417	15	16	26	7	142.5	–
X-K 030.030.	200. 12LF	317.6	708	874	170	267	700	786.5	6xM20x30	132	G1/2	G1	100	17	56	47	M39x2	35	50	440	417	15	22	–	–	86.5	–
X-K 030.030.	200. 27LF	317.6	708	874	170	267	700	1189.5	6xM20x30	132	G1/2	G1	100	17	56	47	M39x2	35	50	440	417	15	22	–	–	489.5	–
X-K 030.030.	400. 24LF	317.6	708	874	170	267	1100	1186.5	6xM20x30	132	G1/2	G1	100	17	56	47	M39x2	35	50	440	417	15	22	–	–	86.5	–
X-K 050.030.	200. 15LF	493.1	785	1083	200	267	719	1208	8xM20x30	150	G3/4	G1	115	25	63	52	M42x2	40	55	440	417	23	30	–	–	489	–
X-K 050.030.	400. 11LF	493.1	785	1083	200	267	1119	1205.5	8xM20x30	150	G3/4	G1	115	25	63	52	M42x2	40	55	440	417	23	30	–	–	86.5	–
X-K 050.030.	400. 23LF	493.1	785	1083	200	267	1119	1741.5	8xM20x30	150	G3/4	G1	115	25	63	52	M42x2	40	55	440	417	23	30	–	–	622.5	–
X-K 075.030.	300. 21	771.6	-	1972	315	324	1367	1337	12xM24x40	200	G1	G1	150	25	100	60	M64x2	60	85	503	637	40	30	–	–	-	–
X-K 100.030.	300. 10	1030	-	1972	315	324	1367	1337	12xM24x40	200	G1	G1	150	25	100	60	M64x2	60	85	503	637	40	30	–	–	-	–
X-K 170.030.	200. 10	1627	-	2447	420	368	1404	1404	18xM30x55	320	G1	G1	240	35	150	70	M80x2	80	4xØ16	589.5	792	99	30	–	–	433	–

*IV = Integrated valve
**Intermediate flange between working part and intensifier twisted by 180°

Hinweise

- Identical external dimensions and distance between holes for X-S 001 and X-S 002. Must be observed when mounting the tension rod for stroke monitoring ZHU and the external linear position sensor ZHW!
- All types up to X-S 030 are prepared for stroke monitoring ZHU and external linear position sensor ZHW.

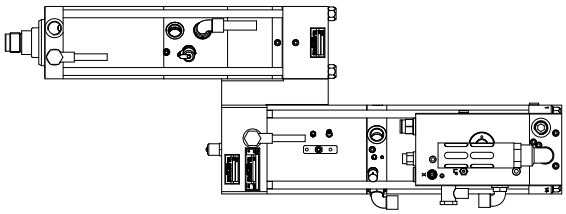

Example: **Model version** Z form.
Intermediate flange, mounting flange and pressured air connection are also available in twisted layout mounting. Additionally, the intermediate flange can be replaced by a hydraulic hose. These drives can be found in leaflet „TOX®-Pneumohydraulic Unit“. Further information are available on **www. tox-en.com**.

TOX® PRESSOTECHNIK GmbH & Co. KG
Riedstrasse 4
D-88250 Weingarten
Tel. +49 (0) 7 51 / 50 07-0
Fax +49 (0) 7 51 / 5 23 91
E-Mail: info@tox-de.com
www.tox-en.com

Product Range

TOX®-Powerpackage

TOX®-PowerKurver

TOX®-ElectricDrive

TOX®-FinePress

TOX®-Presses

TOX®-Controls
TOX®-Monitoring

TOX®-Joining-Systems

TOX®-Tongs

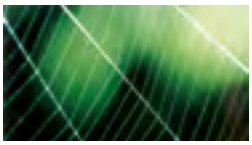

TOX®-Punching
TOX®-Coining

TOX®-Press-Fitting

TOX®-Production Systems